SOLA

automotive interiors

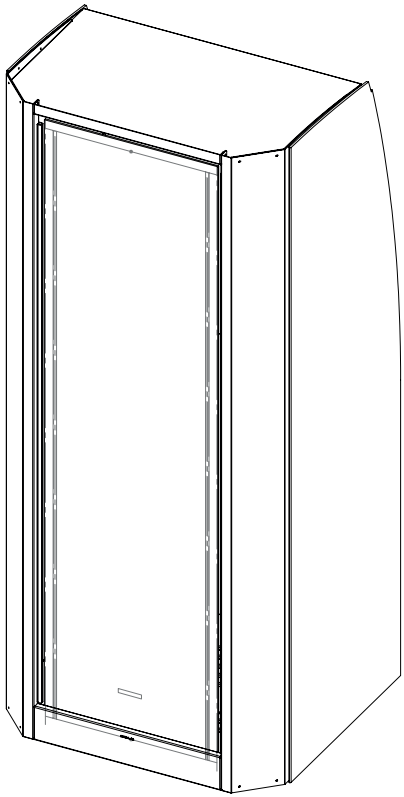

Shower cabin

Mercedes sprinter / VW Crafter / MAN TGE

Installation manual

General information

IMPORTANT *Always make sure all connections are tight and secure before driving and occasionally check the fittings in particular when going off-road.*

TIP Clean the powder coated surfaces by using a mild soap, try to avoid any aggressive detergents.

NOTICE The installation can involve working with electricity, water or gas. Please make sure you are competent or contact a professional.

Required tools

- I HEX 4mm
- I TORX T15
- I DRILL 3mm
- I Screw/Drilling
- I Rivet tool

BOLT KIT
shower cabin

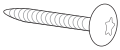

6x 5x30mm screw

6x 20mm rubber ring

4x M6 rivet

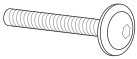

4x M6x30 flange bolt

2x 5x12mm screw

ACCESSORIES
shower cabin

1x vertical drain

General information

Options

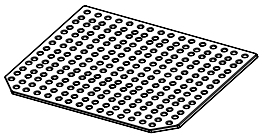

Ultra grip mat
removable

Placement

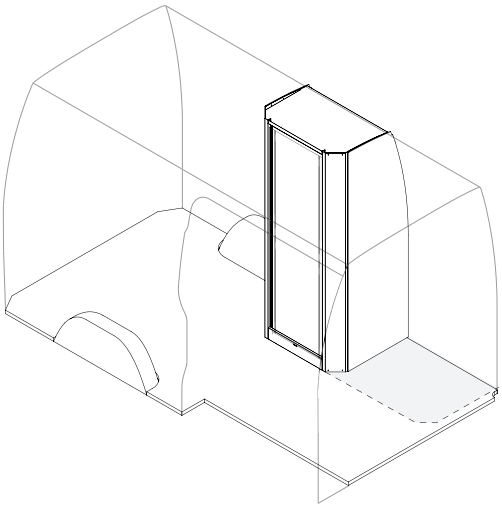

figure 1

MB Sprinter **L2** (2006+) / VW Crafter **L2** (2006-2018) I VW Crafter/MAN TGE **L3** (2018+)

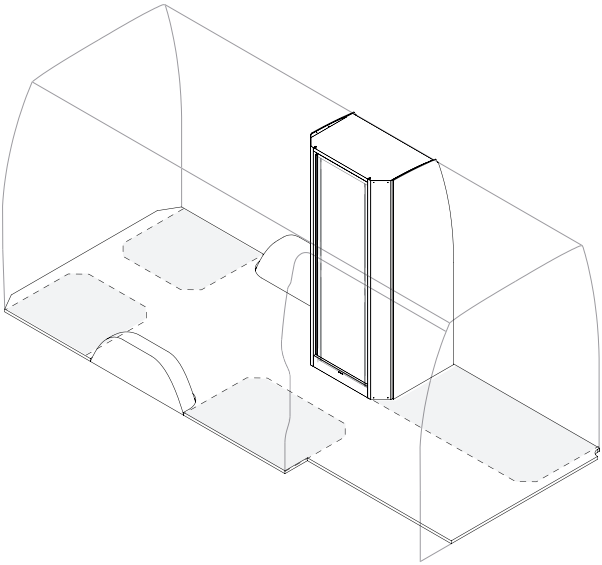

figure 2

MB Sprinter **L3**/**L4** (2006+) / VW Crafter **L3**/**L4** (2006-2018) I VW Crafter/MAN TGE **L4** (2018+)

Installation

Infrastructure

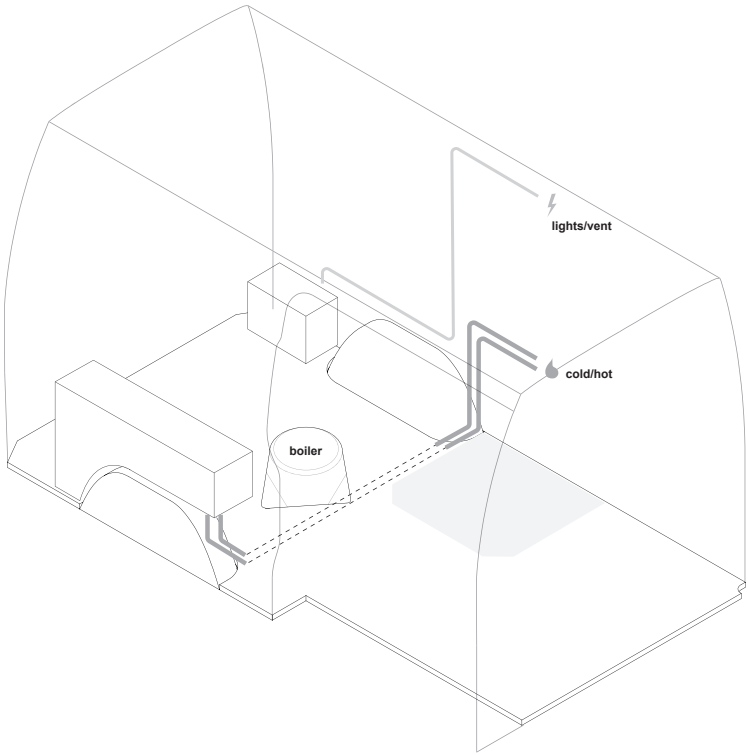

figure 3

1. Deciding on the exact position inside the van and prepare the water and electricity infrastructure. It is recommend to test your water system and electrical devices independently before placing the shower unit. When using a mixer for cold and hot water we recommend to pre-drill any holes required in the shower at this stage.

Installation

Placement

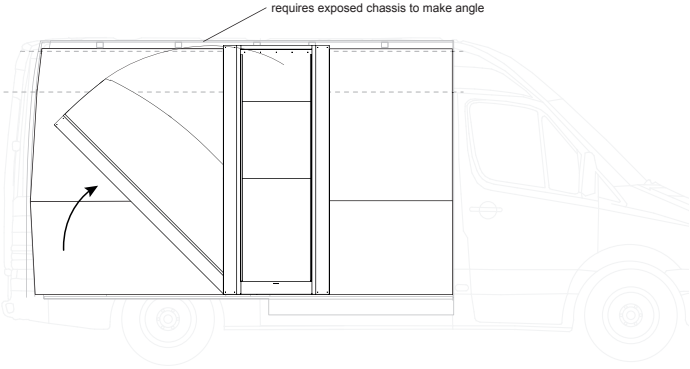

figure 4

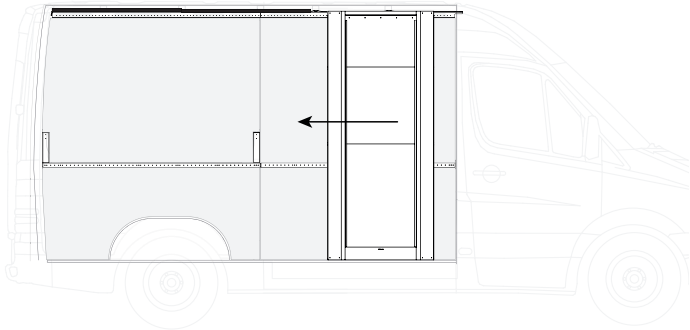

figure 5

2. Leave the chassis exposed on the ceiling. Now bring the shower unit in position by tilting it as shown in (fig 4).

When working with the SOLO evolution interior system you can close the ceiling panels first and slide the shower sideways to its final postion.

Installation

Moist management and waste water tank

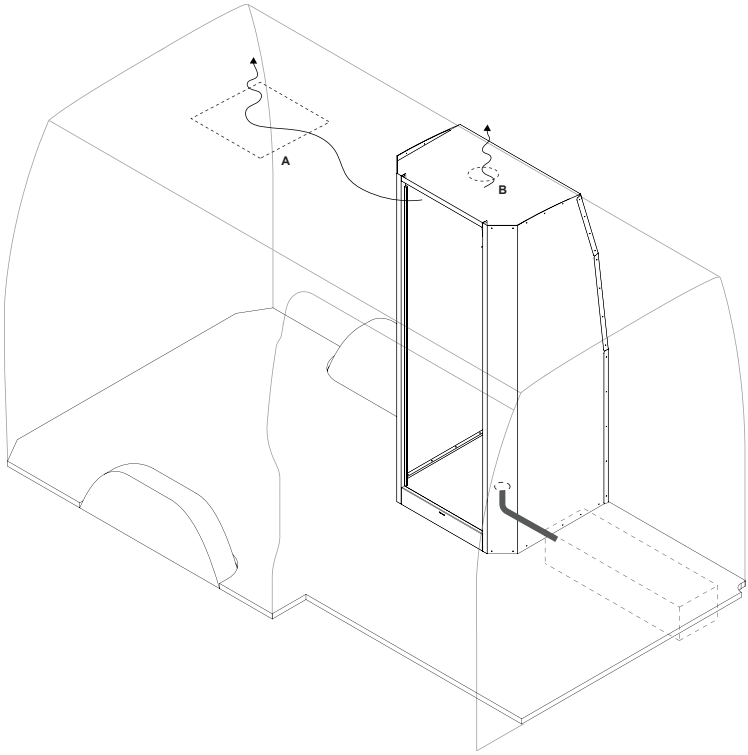

figure 6

3. To get rid of the excess moist it is recommended to have a vented opening through the roof either close by **A** or directly inside **B** the shower cabin. Note that a vent inside may affect your standing height.

4. Please check the potential location for the drain on the bottom chassis and prevent drilling on any chassis re-enforcements or close to the fuel tank.

Installation

Water drainage

figure 7

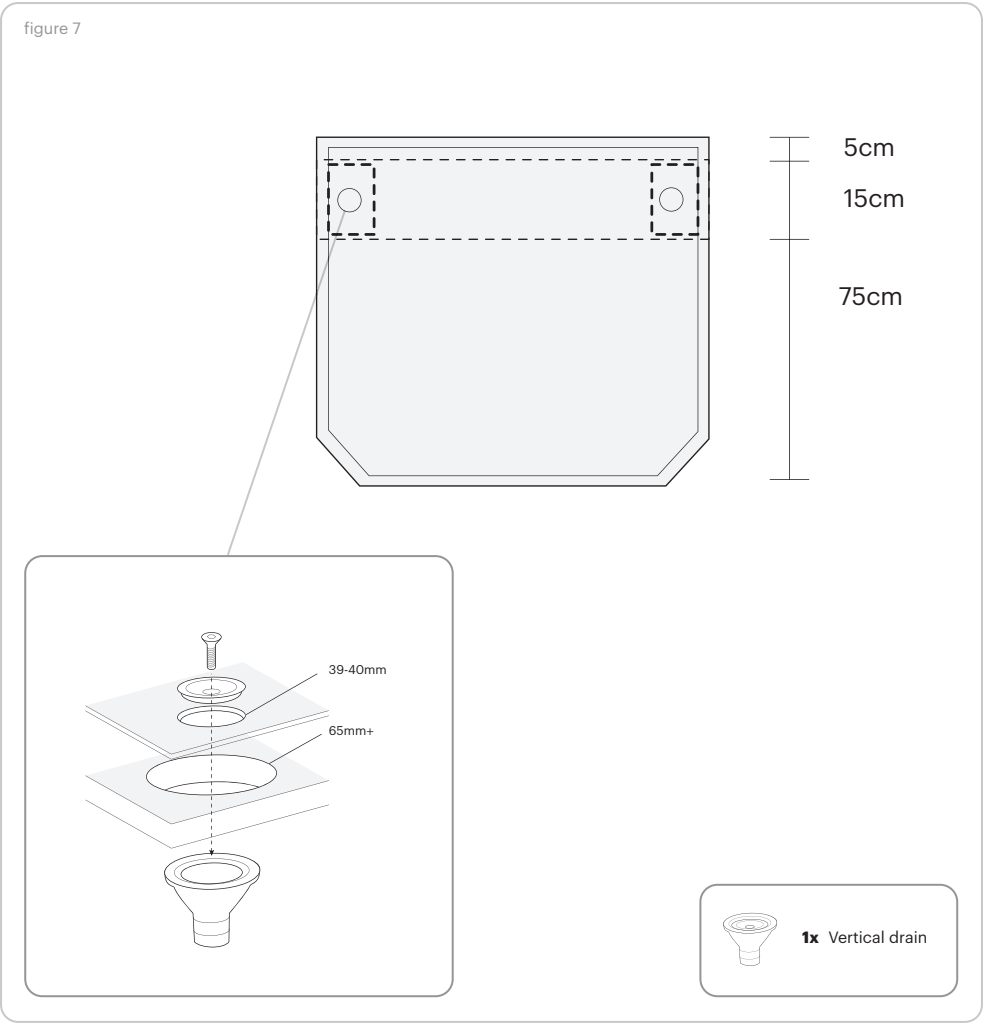

5. For the drain we recommend to position it at the back end zone of the shower, either at the far left or right side if possible. Drill a hole the shower cabin floor followed by marking and drilling an additional hole in the van floor to allow the drain to close off properly.

Installation

A Wall attachment universal

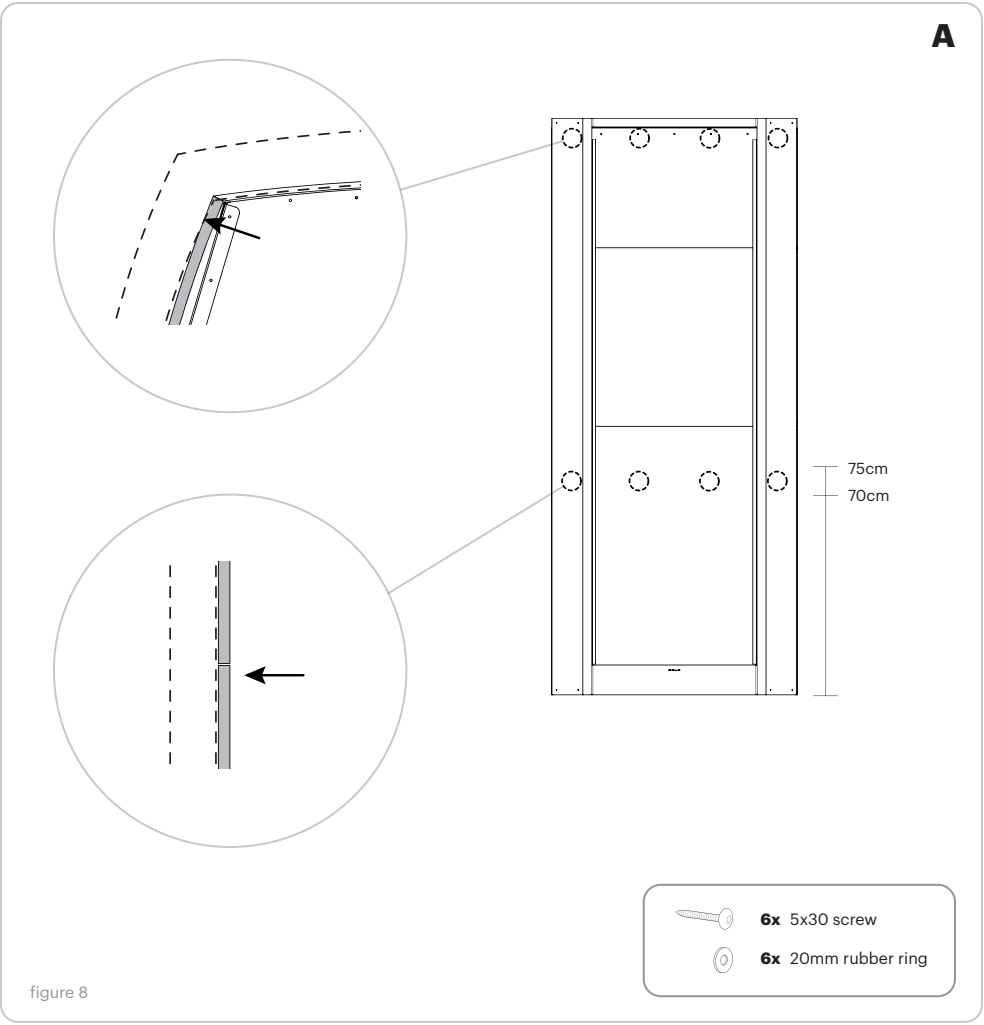

figure 8

6. Use a single wall panel with a minimal thickness of 9mm or horizontal slats as structural support for the shower cabin to be able for it to be fixed to the wall. Alternatively use a metal bracket for a stronger hold. Mount the upper section firmly at the 4 indicated screw positions (fig 8), followed by the 4 in the middle.

Installation

B Wall attachment SOLO evolution rails

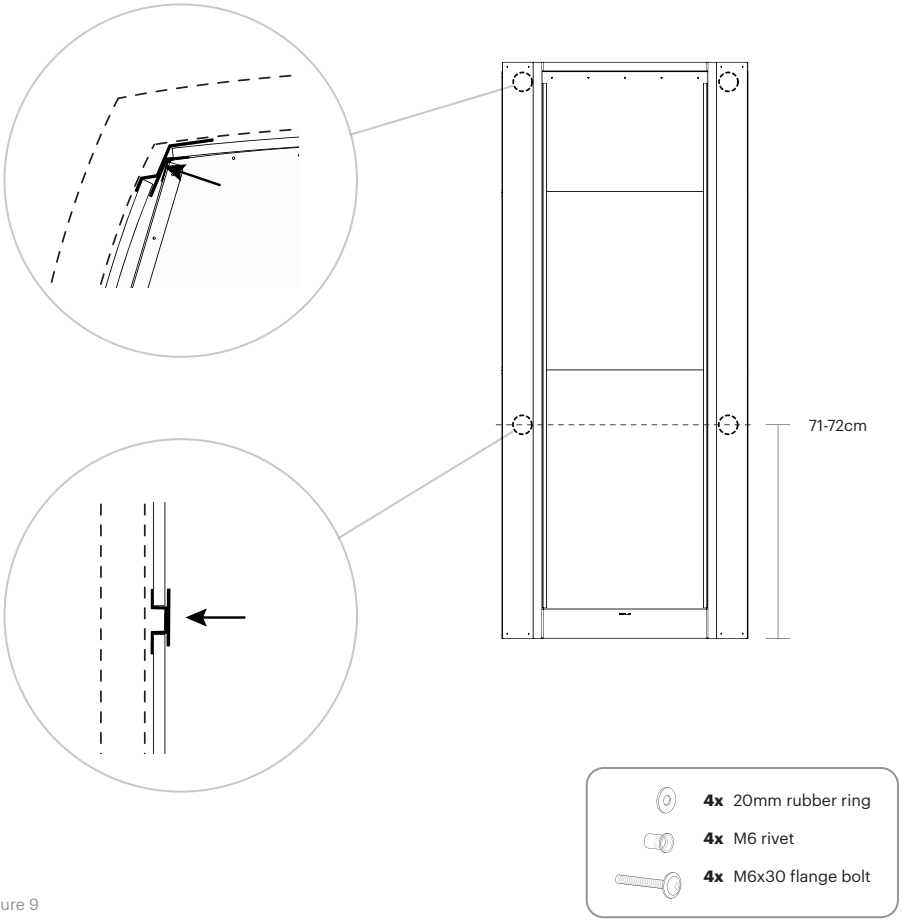

figure 9

6. When using our single evolution rail or evolution interior system mounting the shower will require a rivet and bolt construction for higher strength and faster disassembly. Position the shower at it final location and mark 2 holes at the upper corner and 2 holes at the middle section as indicated (fig 9). Make sure it aligns properly to the brackets(s). close of the bolt by adding therubber washer to secure full water tightness.

Installation

Leak test

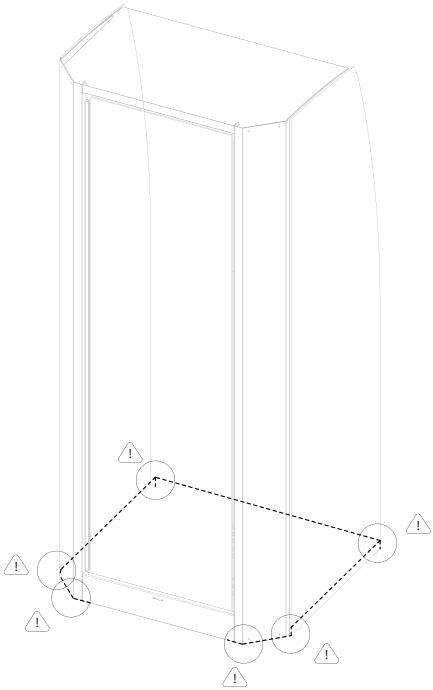

6. Even though the shower comes pre-sealed, it is best to do an extra leak test before final install and add some extra sealent (silicon/epoxy based) in case of failure. When the shower unit is firmly installed an extra seal on the bottom section is advised to guarantee there will be a long lasting and secure watertight finish.

Installation

Mixer position

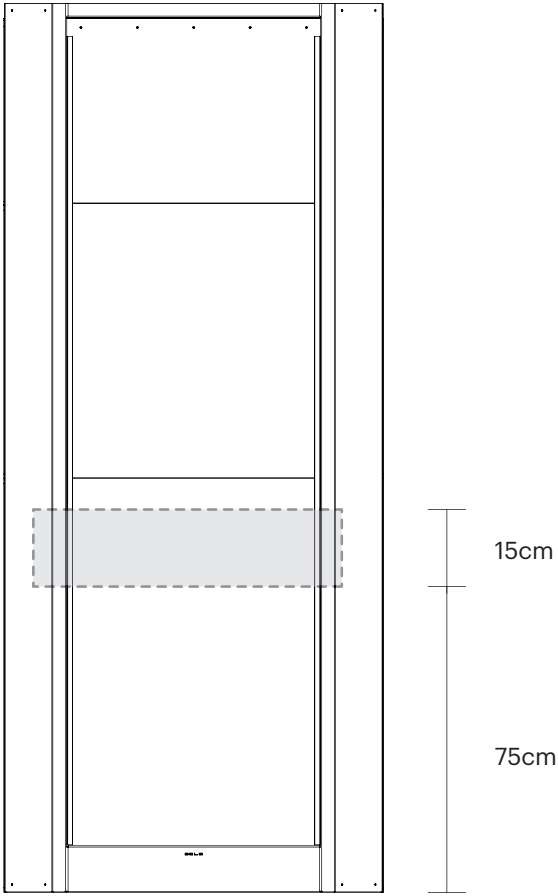

figure 10

7. When installing a water mixer inside the shower we recommend to use the indicated zone at the backside of the shower. In this area there is typically a large cavity at the chassis that gives extra room for hoses to flex.

Installation

Fabric door

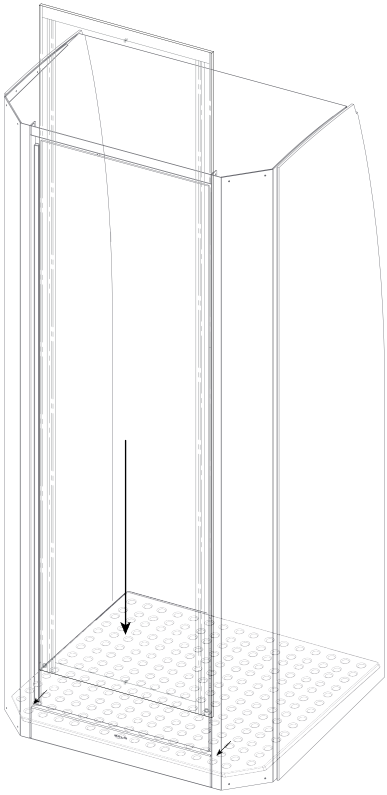

2x 5x12mm

figure 11

8. Unzip the front panel and slide it all the way from top to bottom. Pull tight and fixate into place from the inside at the bottom by the included screws.

Installation

Bamboo flooring

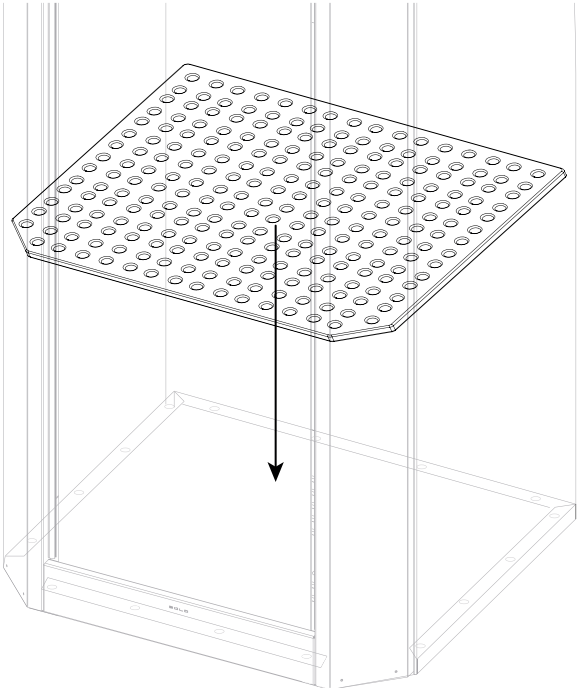

figure 12

9. Lay the grip floor mat on the bottom tray. It is slightly elevated so water will disperse by itself.

Installation

Side wall finish

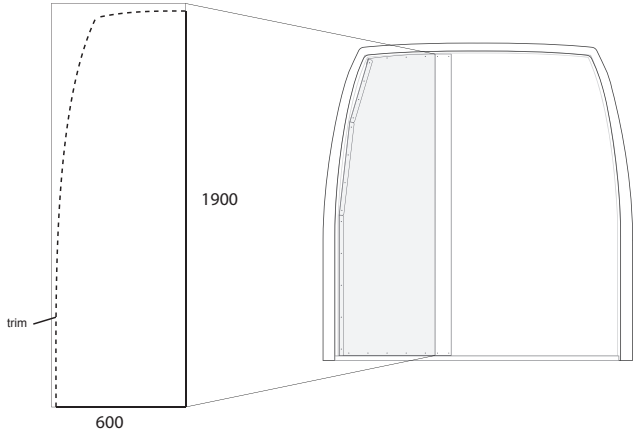

figure 13

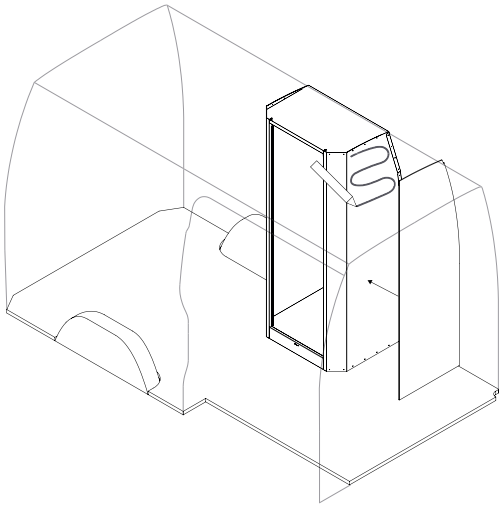

figure 14

10. Optionally you can cover the side walls. Start by trimming a base plate of 1900mm x 600mm to match the exact curves of the wall and ceiling.